SHREDDER PLANT INTRODUCTION

破碎设备简介

商丘金蓬实业股份有限公司

Pyrojin ECO Industrial Co.,Ltd.

PYROJIN ECO
INDUSTRIAL

Add: 300 meters east of South Train Station, Shangqiu City, Henan Province, China
Tel: +86 17717382264
E-mail: csr2@pyrolysis-machine.com
Web: www.pyrolysis-machine.com

Catalogue

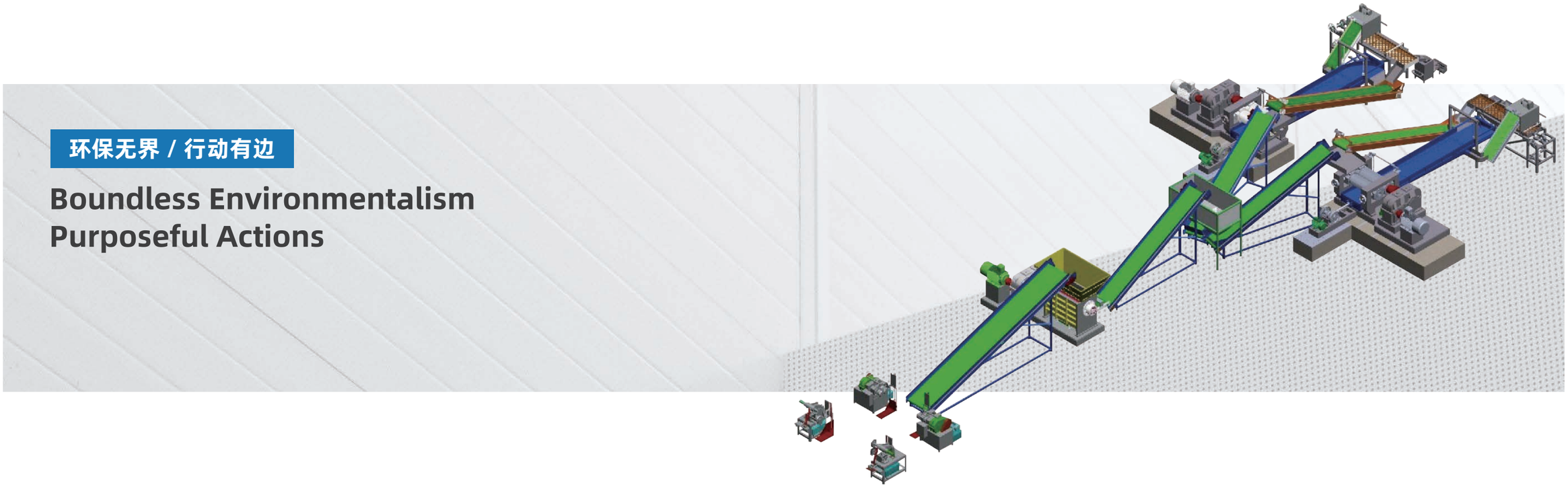

企业简介 Company Introduction ..... PAGE 01

破碎设备工艺流程描述 Shredder Plant Working Principle ..... PAGE 07

破碎设备流程图 Shredder Plant Processing Flow Chart ..... PAGE 08

破碎设备图 Shredder Plant Diagram ..... PAGE 09

破碎设备的特点 Shredder Plant Characteristics ..... PAGE 11

破碎设备相关技术参数 Shredder Plant Technical Parameter ..... PAGE 12

企业资质与荣誉 Company Qualification & Honour ..... PAGE 15

全球客户分布图 Global Customers Distribution ..... PAGE 17

付款条件和运输条款 Terms and Conditions & Delivery Terms ..... PAGE 19

服务保障 Service Guarantee ..... PAGE 23

Company Profile

企业简介

金蓬实业

商丘金蓬实业股份有限公司是一家省级高新技术企业，公司成立于2008年，于2016年12月12日在新三板市场挂牌上市，股票代码：金蓬股份（870188），是一家集科研、生产、销售于一体的专门从事废旧资源综合利用设备制造的专业机构。近年来，在政府及有关职能部门的大力支持下，公司迅速发展壮大，目前公司年产销各种大型成套环保设备100余台(套)，年主营业务收入超过1亿元，年出口创汇额900多万美元，年实现税收达千万元，连续多年被评为出口创汇先进企业、纳税先进单位。

公司的主营业务为环保专用设备的研发、生产和销售。在处理废橡胶、塑料、废油泥、精馏残渣等废弃资源循环再生综合利用方面经验丰富、技术领先。我公司经多年技术攻关，研制出国内独创的热解焚烧新工艺，具有设备投资少、生产工艺简单等优势。公司推出的设备是目前国内技术领先的环保处理设备。公司研发生产的设备技术已经通过ISO 9001：2015国际质量管理体系、ISO 14001：2015国际环境体系认证、欧美标准质量体系CE认证。凭借着高质量的产品，良好的信誉，优质的服务，产品畅销全国近三十多个省、市、自治区，远销全球五大洲。

60+

企业专利 Company Patents

6项发明专利和50多项国家研发专利
Invention Patents（6）& National R&D Patents（50+）

16+

技术&经验 Technology & Experience

长达16年的产品研发和服务经验
More than 16 years experience on product R&D and service

PYROJIN ECO INDUSTRIAL

Pyrojin ECO Industrial Co.,Ltd. is a provincial-level high-tech enterprise founded in 2008. It was listed on the New Third Board market on December 12, 2016, with the stock code: Jinpeng Shares (870188). The company specializes in the research, production, and sales of plant for comprehensive utilization of waste resources. In recent years, with strong support from the government and relevant departments, the company has rapidly expanded. Currently, it annually produces and sells over 100 sets of various large-scale environmental protection plant, with annual main business revenue exceeding 100 million RMB, annual export earnings of over 9 million USD, and annual tax revenue reaching tens of millions of RMB. It has been rated as an advanced exporter and taxpayer for many consecutive years.

The company's main business is the research, production, and sales of environmental protection plant. We have rich experience and leading technology in the comprehensive utilization of waste resources such as waste rubber, plastic, waste oil sludge, and distillation residues. After years of technical breakthroughs, our company has developed a domestically innovative thermal decomposition and incineration process, which has the advantages of low investment and simple production process. The plant launched by the company is currently leading in environmental protection technology domestically. The technology developed and produced by the company has passed ISO 9001:2015 international quality management system certification, ISO 14001:2015 international environmental management system certification, and CE certification of European and American standard quality systems. With high-quality products, good reputation, and excellent service, the products are sold in nearly thirty provinces, municipalities, and autonomous regions nationwide, and are exported to five continents worldwide.

COMPANY Profile

Development History

发展历史

1985

1985年开创了热解行业，有三十余年致力于固废危废综合处理项目的历史。

Pioneered the pyrolysis industry in 1985. Construction of integrated solid and hazardous waste treatment projects with over thirty years history.

2012

2012年公司建成一座省级研发中心。

Established a provincial-level research and development center in 2012.

2014

获得多项奖项。实现固废处理产业化、规模化、标准化。

Received several prizes. Achieving industrialization, scale, and standardization of solid waste treatment.

2016

公司新三板上市。于2016、2017年实现了年销售额达到1亿元以上的规模。

Went public on the New Third Board. In 2016 and 2017, the company achieved annual sales exceeding 100 million yuan.

2020

公司再次承担实施河南省重大科技专项。

Undertakes the implementation of major scientific and technological projects in Henan Province again.

Now

仍致力于设备的研发及危废的处理。

Still committed to plant research and development and hazardous waste treatment.

Company Culture

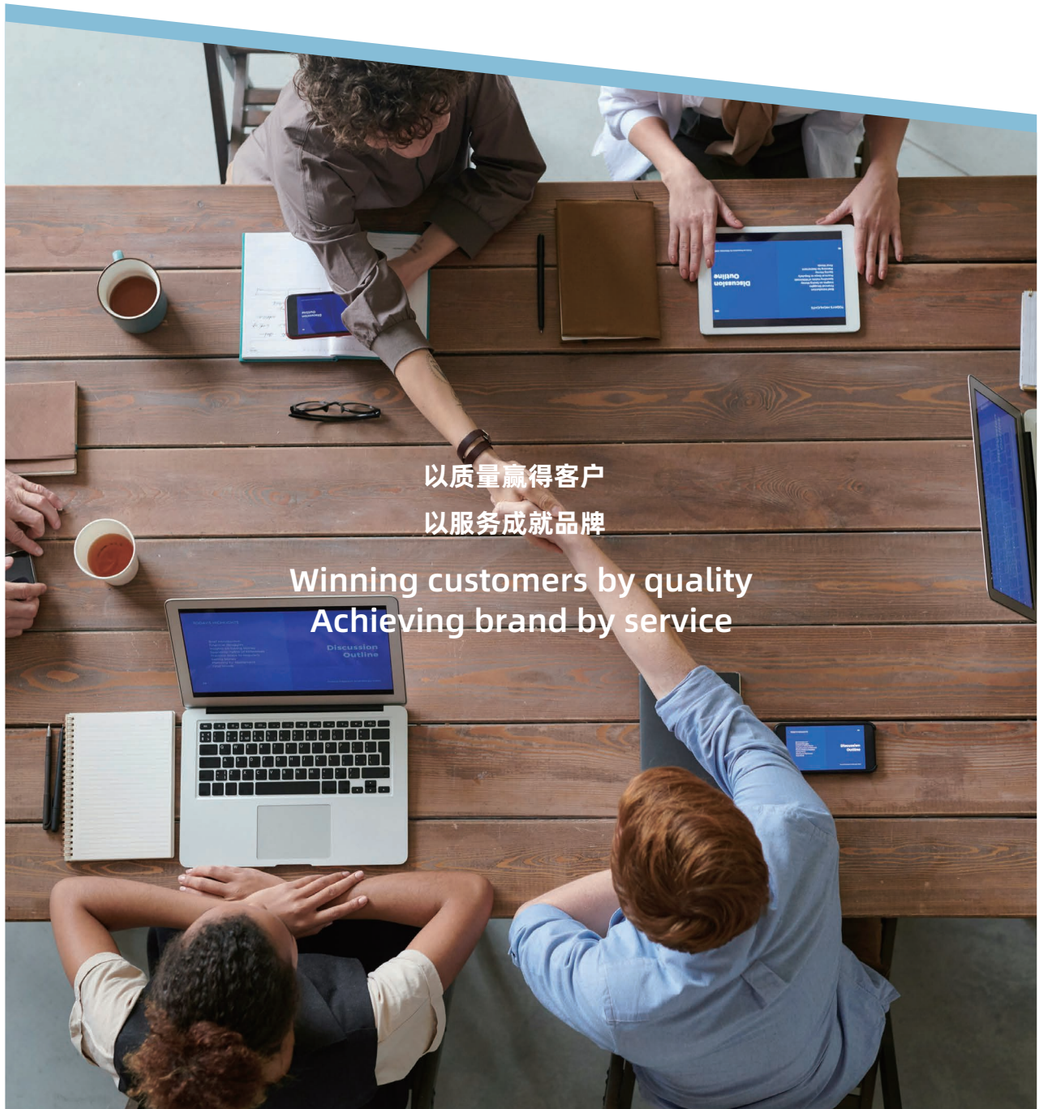

Cultural Value

文化价值

企业使命

Company Mission

用技术和智慧构建美好生活

Building a better life with technology and intelligence

企业愿景

Corporate Vision

科技减污，资源循环，共筑绿色地球。

Innovate for pollution reduction, promote resource recycling, and contribute to building a green Earth.

核心价值观

Core values

客户第一、团队合作、持续创新

Client First, Teamwork, Continuous Innovation

金蓬精神

Pyrojin Spirit

专业、专注、创新、高效

Professional, Focused, Innovative, Efficient

Carbon Black Plant Working Principle

破碎设备工艺流程描述

工作原理
Working Principle

XY-T轮胎破碎机由三部分组成。第一部分是“380型轮胎解体机”，将900-1200废旧轮胎一分为二，以便下段切块机使用。第二部分是“600型轮胎切块机组”，通过将解体后的废旧钢丝轮胎切割成50mmx50mm的橡胶块，提高了废旧钢丝轮胎的安全性和生产效率。第三部分是“重型810轴承式低温破胶机”，它将钢丝轮胎橡胶块（50mmx50mm）破碎成16目和40目的橡胶粉。该机器主要由前后辊、滚子轴承、机架、底座、距离调整装置、润滑系统、传动系统、冷却装置和电气控制系统等组件组成。该机器的主要工作部分由两个空心辊组成，它们以相反的方向以不同的速度旋转。当橡胶材料放置在辊子上时，它被在摩擦和粘附力的作用下挤压在它们之间，通过摩擦和粘附力被拉入间隙，形成楔形橡胶块。在辊子的作用下，橡胶块经历了强烈的压碎、剪切、撕裂和反复的过程，最终完成了橡胶破碎的过程。

The XY-T tyre shredder plant is composited by three parts. First part is the ‘Type 380 tire dismantling machine’, it divides the 900-1200 waste tires into two parts for use by the next part. Second part is the ‘Type 600 tire cutting machine unit’ which improves the safety and production efficiency of scrap steel wire tires by cutting them into 50mmx50mm rubber blocks after dismantling them. Third part is ‘Heavy-duty 810 bearing-type low-temperature rubber breaker’, it crushes the steel wire tire rubber block (50mmx50mm) into rubber powder within 16 mesh and 40 mesh. This machine is mainly composed of front and rear rollers, roller bearings, frame, base, distance adjustment device, lubrication system, transmission system, cooling device and electrical control system and other components. The main working part of this machine consists of two hollow rollers rotating at different speeds in opposite directions. When the rubber material is placed on the rollers, it's squeezed between them, drawn into the gap by friction and adhesion forces, forming a wedge-shaped rubber block. Under the rollers' action, the rubber block experiences intense crushing, shearing, tearing, and repeated action, ultimately completing the rubber breaking process.

Shredder Plant Processing Flow Chart

破碎设备流程图

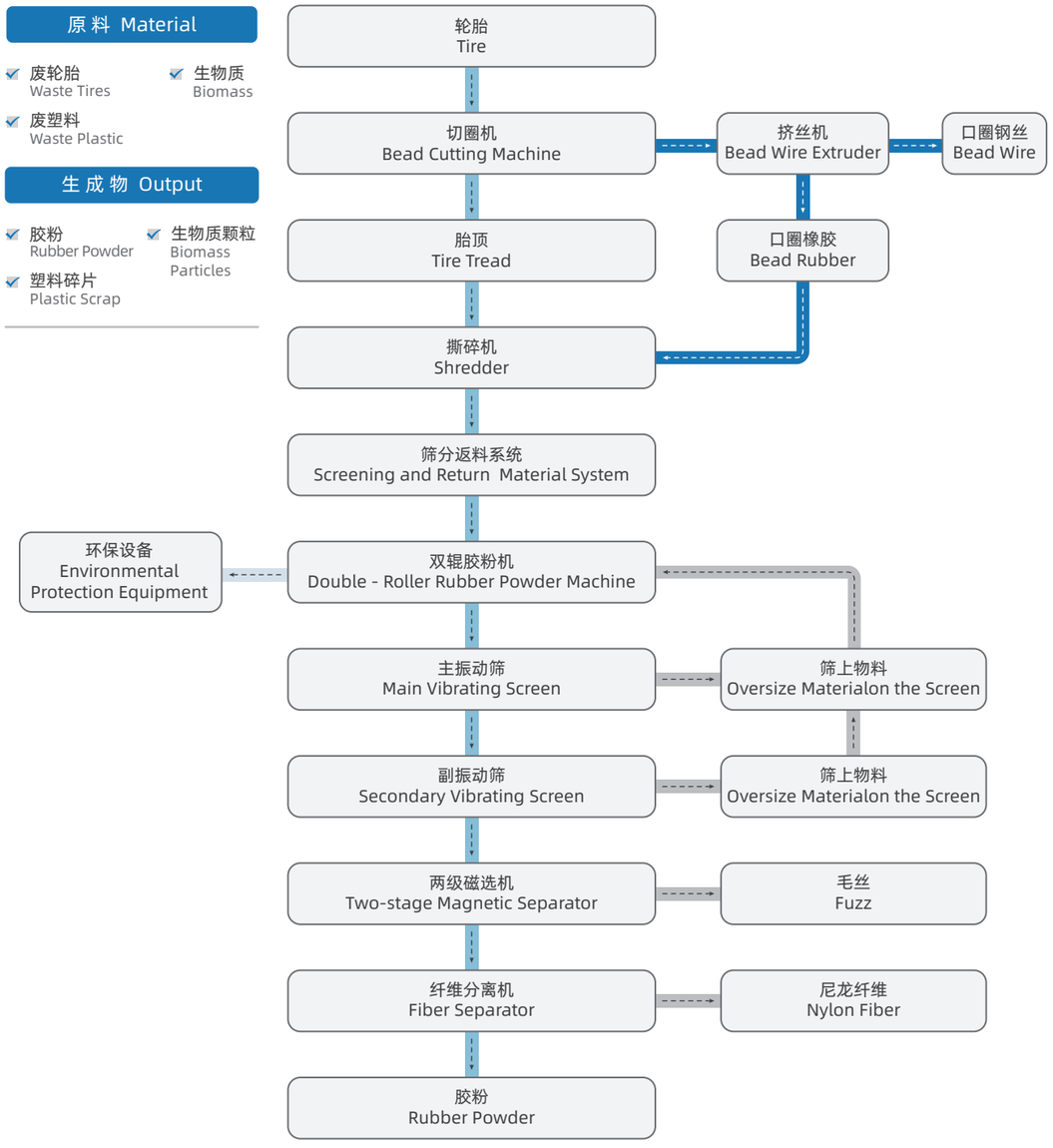

Shredder Plant Key Assembly Diagram

破碎设备关键部件图

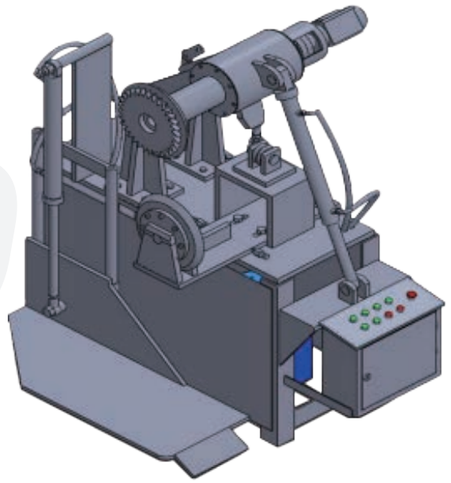

01 380型轮胎解体机图
Type 380 Tire Dismantling Machine

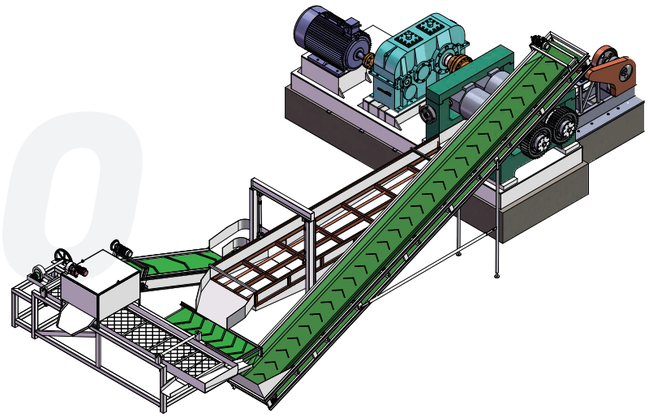

03 重型810轴承式低温破胶机外观图
Heavy-duty 810 Bearing-type Low-temperature Rubber Breaker Rendering

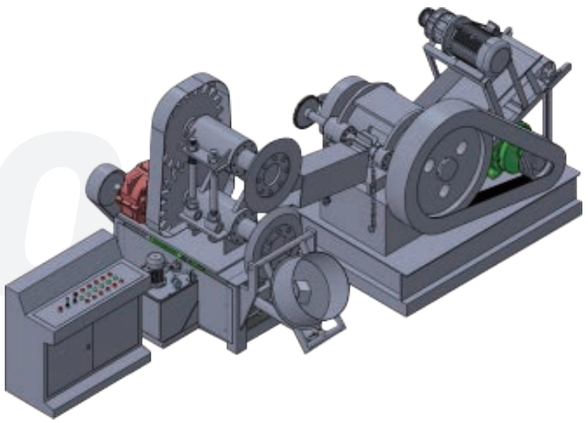

02 600型轮胎解体机
Type 600 tire Dismantling Machine

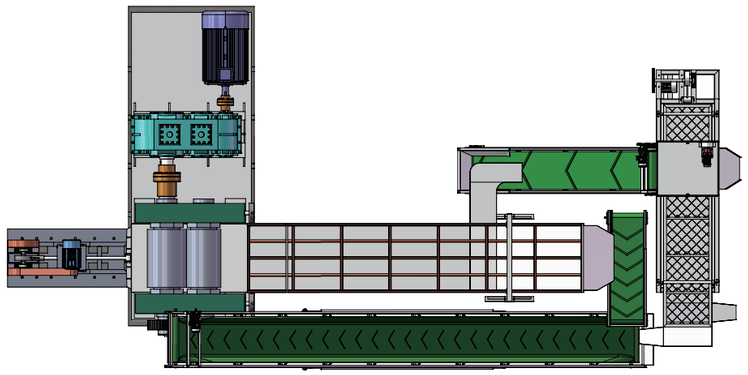

04 重型810轴承式低温破胶机平面设计图
Heavy-duty 810 Bearing-type Low-temperature Rubber Breaker Graphic Design Drawing

Shredder Plant Characteristics

破碎设备的特点

01 使用寿命长（滚筒挤压代替刀片，延长设备使用寿命）。
Long Service life (Use rollers squeeze instead of blade which extend service life).

02 承载能力大。
Large Loading Capacity.

03 高效率。
High Efficiency.

04 低噪音。
Low Noise.

05 体积小。
Small Size.

06 质量轻。
Light Weight.

07 安装维护简单方便。
Simple and Convenient Instillation and Maintenance.

Shredder Plant Parameters

破碎设备参数

380型轮胎切块机
Type 380 Tire Cutting Machine Unit

项目 Item	技术参数 Content
尺寸（长*宽*高） Size(Length*Width*Height)	300mm* 1000mm*1800mm
转数 Rotation Speed	22 Rpm
电机功率 Motor Power	7.5KW
处理量 Capacity	4吨/小时(tons/h)
工作电压 Operating Voltage	380V
机械重量 Weight	1600Kg

600型轮胎切块机
Type 600 Tire Cutting Machine Unit

项目 Item	技术参数 Content
尺寸（长*宽*高） Size(Length*Width*Height)	2100mm* 1800mm* 2400mm
转数 Rotation Speed	450 Rpm
电机功率 Motor Power	39KW
处理量 Capacity	4吨/小时(tons/h)
工作电压 Operating Voltage	380V
机械重量 Weight	4600Kg

Shredder Plant Parameters

破碎设备参数

Shredder Plant

重型810轴承式低温破胶机

Heavy-duty 810 Bearing-type Low-temperature Rubber Breaker

项目 Item	技术参数 Content
斜齿辊：工作辊径*工作长度 Helical Roller: Diameter* Length	810mm*1200mm
直齿辊：工作辊径*工作长度 Spur Roller: Diameter* Length	710mm*1200mm
斜齿辊转速 Helical Roller Speed	27.2 m/min
斜齿辊线速度 Helical Roller Linear Speed	69.08 r/min
直齿辊速度 Spur Roller Speed	26.4 m/min
直齿辊线速度 Spur Roller Linear Speed	54.77 r/min
辊筒线速比 Roller Linear Speed Ratio	1.26:1
减速箱速比 Reduction Gearbox Speed Ratio	27.2:1
产量20目胶粉 Output: 20 Mesh Rubber Powder	4吨/小时（tons/h）
电机功率 Motor	Y2-400m2-8 -280kW or 315kW
尺寸（长*宽*高） Size(Length*Width*Height)	6400mmx2700mmx2400mm
挡胶挡板方式 Rubber Baffle Method	钢板滚筒旁边挡料 Steel Plate Roller Side Stopper
滚筒调距装置 Roller Distance Adjustment Device	0.1mm–20mm

项目 Item	技术参数 Content
制动方式 Braking Method	电机急停和反接电源制动 Motor Emergency Stop and Reverse Power Supply Braking
辊筒轴承 Roller Bearings	推力轴承与轧机轴承 Thrust Bearings and Rolling Mill Bearings
润滑方式 Lubrication Method	干油润滑 Dry Oil Lubrication
冷却方式 Cooling Method	旋转接头冷却满水冷却 Rotary Joint Cooling, Full Water Cooling
传动方式 Transmission System	主电机通过联轴器与减速机高速轴连接，减速机低速轴与前辊筒连接 The Main Motor is Connected to the High-speed Shaft of the Reducer Through a Coupling, and the Low-speed Shaft of the Reducer is Connected to the Front Roller
机架和辊筒材质 Material	铸钢 Cast Steel
机械重量 Total Weight	45MT
810型破胶机辅机 Auxiliary Machinery	振动筛，磁选机，上料机，传送带，胶粉收集器 Vibrating Screen Magnetic Separator Feeder Conveyor Rubber Sowder Collector

注：

1. 以上列表为主要部件列表。 详细清单以发货清单为准。
2. 由于机组技术革新，机组不同部分不再单独发行。
3. 所有技术参数仅供参考，实际尺寸以发货为准。

Note：

1. The above list is the list of main components. The detailed list is subject to the delivery list.
2. Due to the technical innovation of plant, different parts of the unit will not be issued separately.
3. All technology parameters are for reference only, the actual size subject to delivery.

Company Qualification & Honor

企业资质与荣誉

企业资质 Company Qualifications

我公司经多年技术攻关，研制出国内独创的热催化热解新工艺。公司研发生产的设备技术已通过：ISO9001;2015国际质量管理体系；ISO14001 ;2015国际环境体系认证；欧美标准质量体系CE认证。

2013至2019年累计获得河南省科学技术成果10项，其中多个发明专利分别获得“河南省科技进步二等奖”、“河南省科普成果奖”、“商丘市科技进步一等奖等”。

After extensive research, we've pioneered a unique domestic thermal catalytic pyrolysis process.The plant technology developed and produced by the company has passed; ISO9001;2015 international quality management system; ISO14001; 2015 international environmental system certification; European and American standard quality system CE certification.

From 2013 to 2019, a total of 10 scientific and technological achievements were obtained in Henan Province.

2012

建立了一所省级工程技术研究中心；河南省废旧橡塑综合利用设备工程技术研究中心。
Established provincial engineering technology research center; Henan Province Waste Rubber and Plastic Comprehensive Utilization Equipment Engineering Technology Research Center.

2014

河南省重大专项； 固体高分子废物热解制取燃油成套装备关键技术研究。
Major special projects in Henan Province;Research on key technologies of complete equipment for producing fuel by pyrolysis of solid polymer waste.

2018

研发废旧橡胶制品处理与资源化高值利用成套装备关键技术研究的项目，承担了2018年市级重大科技专项及2019年省级重大科技专项。
The project of research and development of key technologies for the treatment and high-value utilization of waste rubber products, undertaking the major municipal science and technology projects in 2018 and the major provincial science and technology projects in 2019.

发明专利 Invention Patents

6

- 设有自动出料装置的旋转式固体废弃物热解设备
- 环保节能型炭黑深加工设备
- 工业连续化废机油处理蒸馏设备
- 工业连续化环保节能型废轮胎热解设备
- 一种锅炉压力容器端面板环向焊接装置
- 炭黑、钢丝分离装置

- Rotary solid waste pyrolysis plant with automatic discharging unit
- Energy saving carbon black deep processing plant
- Industrial continuous waste engine oil treatment and distillation plant
- Industrial continuous energy saving waste tires pyrolysis plant
- A device for circumferential welding of end panels of boiler pressure vessels
- Carbon black and steel wire separator

实用型&其他专利 Utility&Other Patents

56

外观设计专利（4项）	Appearance Patent (4)
实用型专利（52项）	Utility Patents (52)
软件著作权（6项）	Software copyrights (6)

Global Customers Distribution

全球客户分布图

公司产品销售过的地区
Regions where our company has conducted sales

公司尚未开拓的市场
Markets our company has not yet entered

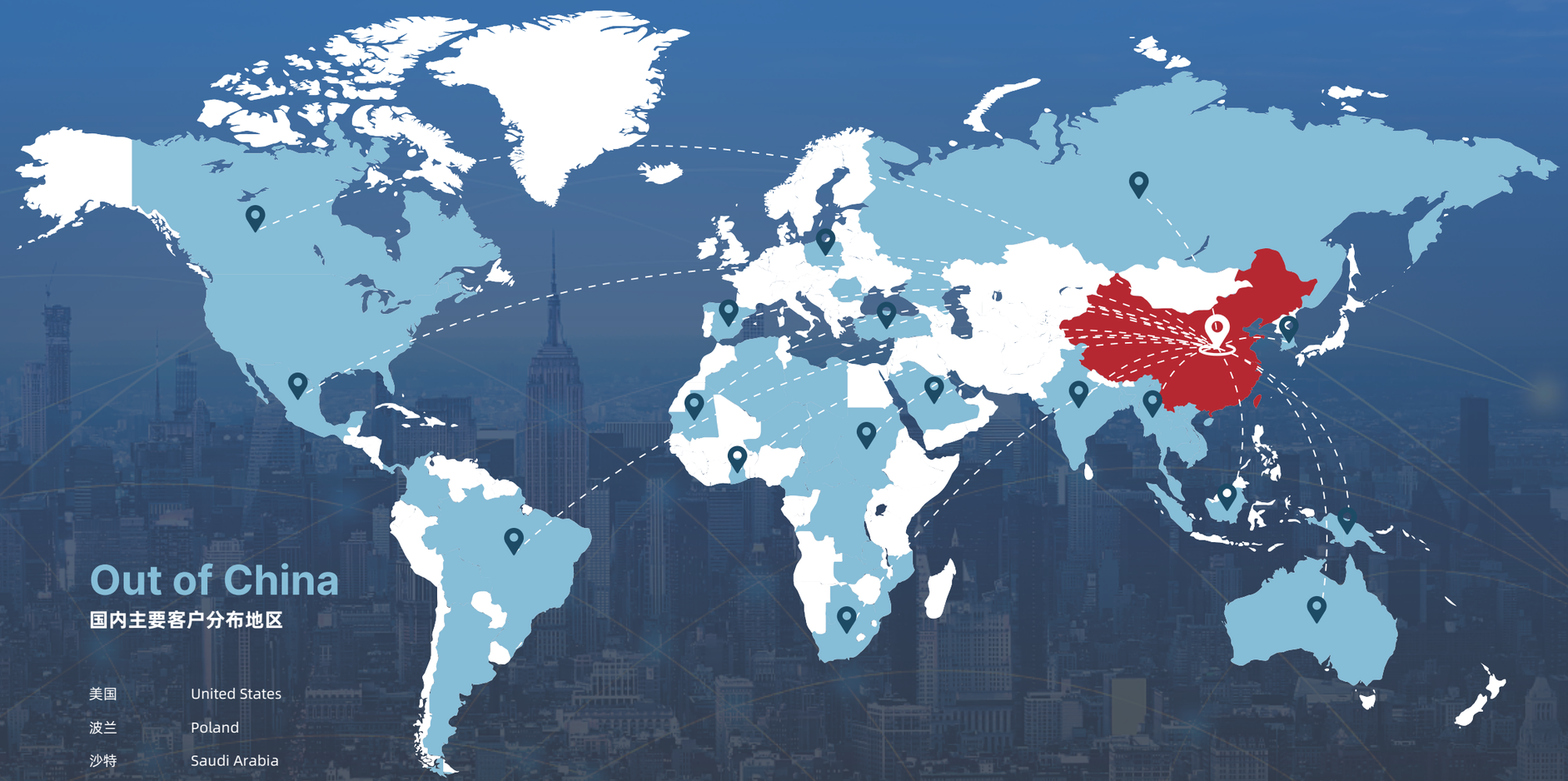

1500 +

累计售出1500多套设备（间歇设备、连续设备）
Cumulative sales of more than 1500 sets of plant (Intermittent and continuous plant)

40 +

远销40多个国家和30多个中国地区
Export to over 40 countries all over the world and 30 region in China

16 +

长达16年的产品研发和服务经验
More than 16 years experience on product R&D and service

Out of China

国内主要客户分布地区

美国	United States
波兰	Poland
沙特	Saudi Arabia
巴西	Brazil
泰国	Thailand
土耳其	Turkey
奥地利	Austria
加纳	Ghana
罗马尼亚	Romania
葡萄牙	Portugal
苏丹	Sudan
韩国	Korea
印度等	India, etc.

In China

国内主要客户分布地区

宁夏	Ningxia	广州	Guangzhou	河南鹤壁	Hebi,Henan
山东济宁	Jining,Shandong	内蒙	Inner Mongolia	山东济宁	Jining,Shandong
山西大同	Datong, Shanxi	江西	Jiangxi	新乡	Xinxiang
新疆	Xinjiang	贵州	Guizhou	贵港	Guigang
湖南	Hunan	青岛	Qingdao	聊城	Liaocheng
邯郸	Handan	陕西	Shaanxi	云南等	Yunnan, etc.

Terms and Conditions

付款条件

价格条款：
2020国际贸易术语解释通则中的FOB价，连云港港口。

付款条件：
第一：合同签订后，以电汇（T/T）方式预付合同金额的40%。
第二：60% 合同金额将在装货提供提单后通过电汇（T/T）。

买方为卖方工程师提供安装调试期间的双程机票、食宿、买方所在国当地交通及意外保障。买方还应支付工程师每天100美元的工资。

PRICE TERMS:
FOB LIAN YUNGANG price, as Incoterm 2020.

PAYMENT TERMS:
First: +40% of contract value will be paid by T/T in advance after signing the contract.
Second:+60% of contract value will be paid by T/T .

The buyer should provide double tickets, food, accommodation, Local traffic in buyer's country and accident assurance for seller's engineer during installation and commissioning. The Buyer should also pay the engineer's salary of 100 USD per day.

Shipping photos

Delivery Terms

运输条款

交货：
- 装运港：中国连云港。
- 转运或分批装运：禁止。
- 发货日期：收到电汇定金之日起 60 天内。

标记：毛重/净重

价格有效期：30天

保修期：主反应器一年。
买方应根据卖方提供的操作手册来操作设备。

Delivery:
- Port of shipment: Lianyungang, China.
- Transshipment or Partial shipment: Prohibited.
- Shipment date: within 60 days upon the date receiving the deposit by T/T.

Marking: Gross weight /Net weight

Price Valid: 30 Days

Warranty: ONE YEAR for the main reactor.
The buyer should operate the plants according to the operation manual the seller supplied.

Service and Support

售后服务与支持

交货：质量保修期：主反应器保修一年。

安装：根据买方要求，我公司派工程师到买方现场进行安装、调试，并对买方工人进行操作、维护等技能培训。

根据买方厂房及土地布置提供厂房布局设计图、土建资料、操作手册等。

对于用户造成的损坏，我公司按成本价提供配件。

我厂以成本价向客户提供易损件。

Delivery: Quality warranty period: One year warranty for the main reactor.

Installation: According to the requirements of the buyer, our company sends engineer for installation and commissioning in buyer's site including the training of skills of buyer's workers on operation, maintenance, etc.

Supply layout according to buyer's workshop and land, civil works information, operation manuals, etc. to the buyer.

For the damage caused by the users, our company provides the parts and accessories with cost price.

Our factory supplies the wearing parts with the cost price to clients.

PROTECTING NATURE FOR A SUSTAINABLE FUTURE

保护自然，创造永续美好

技术研发
Principle Development

多项专利
Several Patents

品质保证
Quality Assurance

非标定制
Customization

可靠的有保障的服务
Reliable Guaranteed Service

以客户为中心，以质量求生存，以创新谋发展。
Customer centricity, survival through quality, and development through innovation.

4大优势
Four Major Advantages

完善的服务
Perfect service

合理的价格
Reasonable price

4

稳定的性能
Stable performance

诚信的行为
Honest behavior

质量管理体系
Quality Management System

- 质检小组把控质量
  The quality inspection team controls the quality
- 项目小组全程服务
  Full service provided by the project team
- 严控生产制作流程
  Strictly control the production process
- 售后维护保证服务
  After sales maintenance guarantee service

Service Guarantee

服务保障

Production Service

生产服务

对整个运输过程进行监控，确保安全性和及时性；

Monitor the entire transportation process to ensure safety and timeliness

根据需求，邀请客户到厂验证后发货；

According to demand, customers are invited to the factory for verification before shipment;

提前与客户联系，准备现场所需的辅助物品，确保在更短的时间内生产；

Contact customers in advance to prepare auxiliary items needed on site to ensure production in a shorter time;

提前向客户提供所需图纸，指导客户提前做好土建工作，确保在较短的时间内投产。

Provide customers with required drawings in advance, and guide customers to complete civil construction work to ensure that they can be put into production in a short period of time.

售前指导 Pre-sales Guidance

详细了解客户需求，分析规划并提供产品配置方案供客户选择。

Understand customer needs in detail, analyze planning and provide product configuration solutions for customers to choose.

售中咨询 Sales Consultation

邀请客户参观生产现场或厂区，介绍整个生产过程；为客户提供综合咨询、规划、实施等系列服务。

Invite customers to visit the production site or factory area and introduce the entire production process; provide customers with comprehensive consulting, planning, implementation and other series of services.

售后服务 After-sales service

01 独家交付经理和售后工程师双重服务；
Dual services of exclusive delivery manager and after-sales engineer;

02 现场安装、调试、生产，工程师全程保驾护航。
On-site installation, commissioning and production, engineers will escort you throughout the process.

03 提供专业的培训与相关技术咨询；
Provide professional training and related technical consultation;

04 售后部门设有24小时的紧急叫应服务系统；
The after-sales department has a 24-hour emergency response service system;

05 定期维护客户，保持高效沟通，并及时为客户解决问题；
Maintain customers regularly, maintain efficient communication, and solve problems for customers in a timely manner;

06 为客户终身提供成本价的易损件。
Provide customers with consumable parts at cost prices for life.